PROPREITY & CONFEDENCIAL : All information in this drawing is the sole property of DEMO CASTERS PVT LTD. Any reproduction inpart or as a whole without the written concent of Demo Casters is prohibitted.

LID

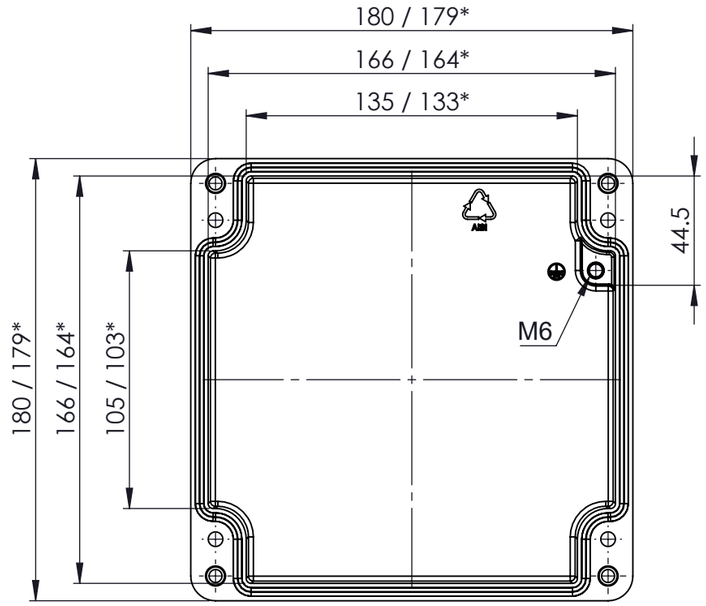

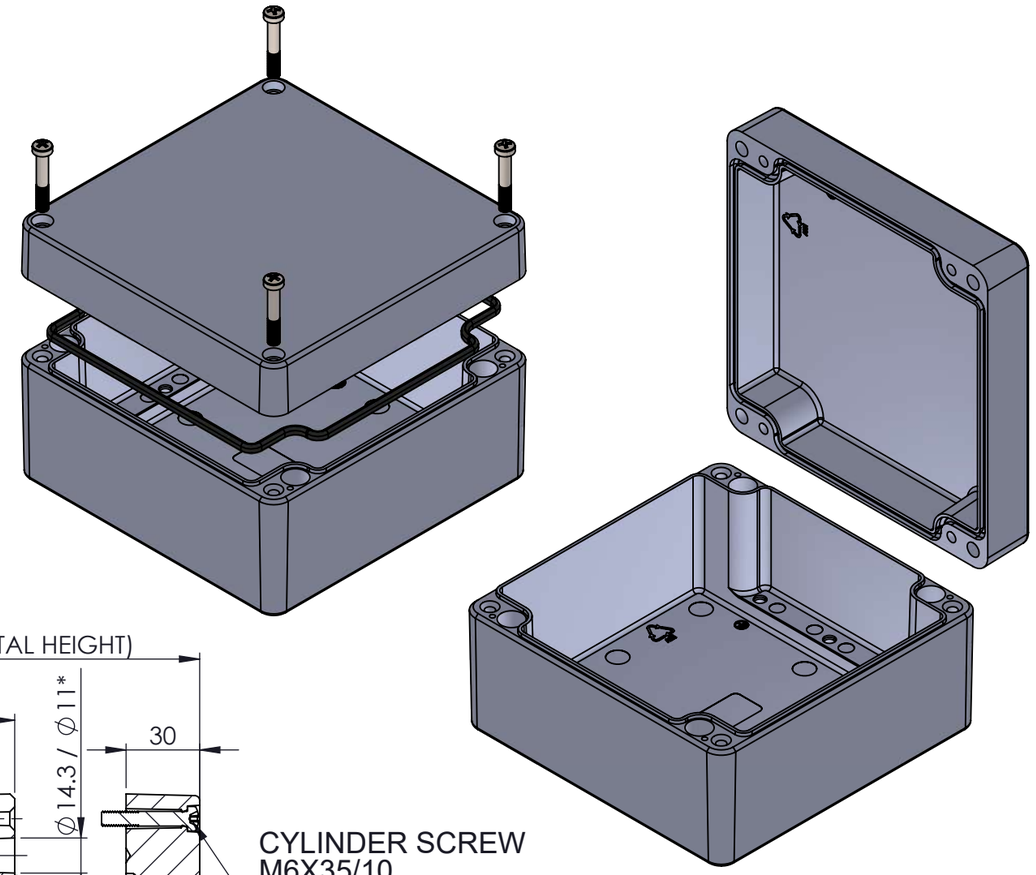

BASE

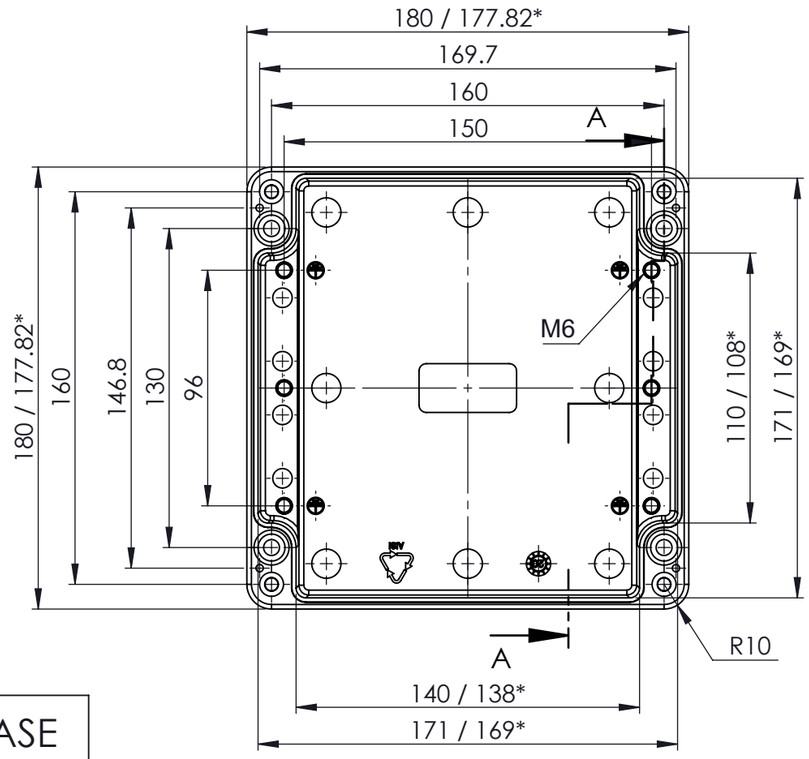

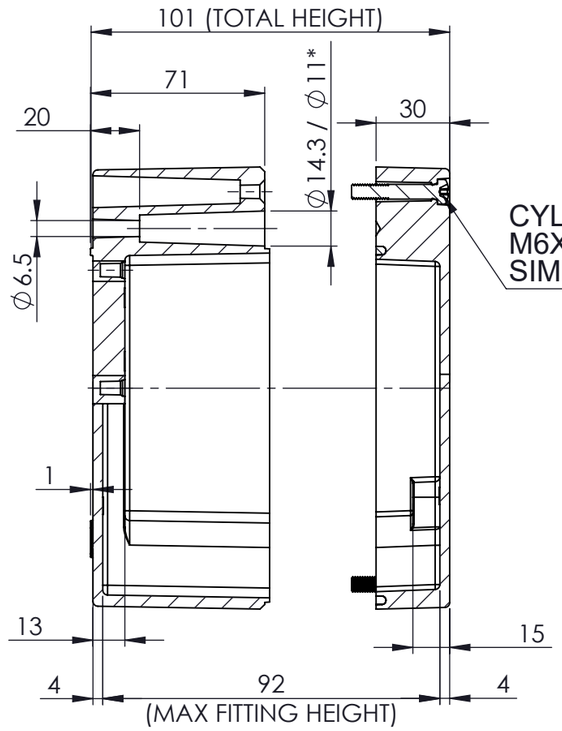

CYLINDER SCREW
M6X35/10
SIMILAR TO DIN84

* = Conical form tapering downwords
Free dimensions-tolerance to GTA 13/5 DIN 1688

ENCLOSURE/BOX MEETS THE REQUIREMENTS OF
IS/IEC 60529:2001
OR
EN 60529
FOR IP66 / IP67 / IP68 SEVERITY

MANUFACTURER	MODEL	BRAND NAME
DEMO CASTERS	BB 081	BBOX

TOLERANCE (AS PER) GTA 13/5 DIN 1688	MATERIAL ALUMINIUM ALLOY GdAlSi12(Fe) - DIN1706 ENAC44300	ALL DIMENSIONS ARE IN : Millimeters (mm)	ENCLOSURE /BOX SIZE W X L X H 180 X 180 X 101
ALL UNSPECIFIED RADII = R 1.5		SHEET SIZE : A3	
SALT MIST TEST > 1000 Hrs	DRAWN BY 26-09-2024 V.V.M		DRAWING NO / REVISION NO
FINISH: NATURAL OR POWDER COATED	CHECKED BY 26-09-2024 RAJ.K.JHA	SCALE 1:3	DEM-001-24
	APROVED BY 26-09-2024 V. BIJLANI		
	RELEASED		

RoHS COMPLIANT · FLAME RETARDANT · IP66 · IP67 · IP68 · REACH · CE · alu · SALT SPRAY 1000 HOURS + · IMPACT RESISTANCE