LID

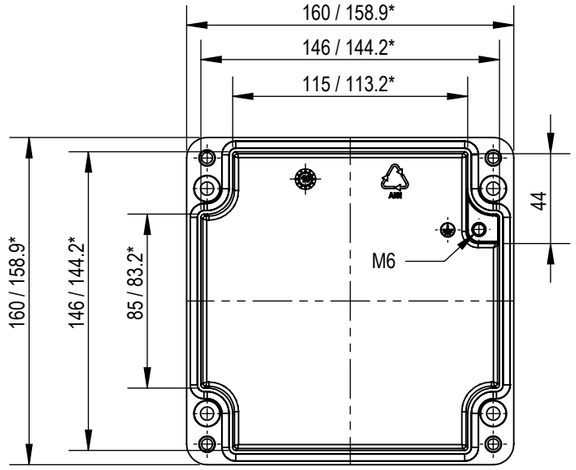

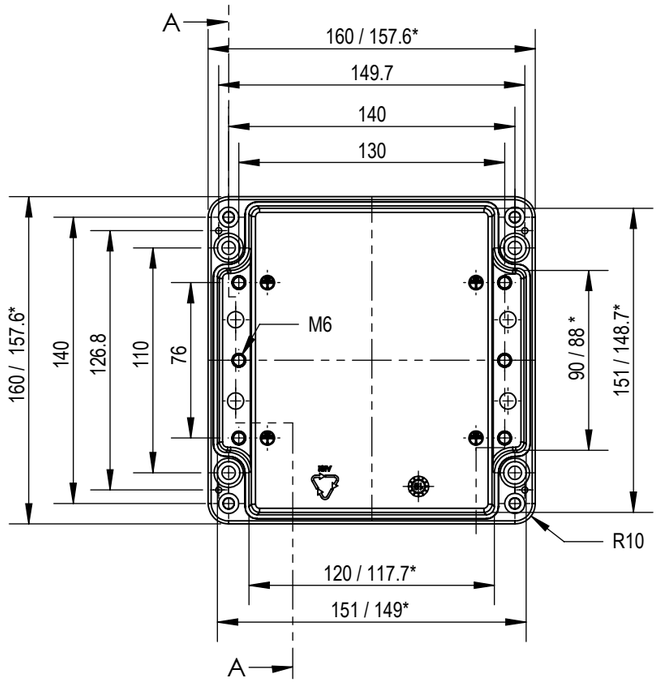

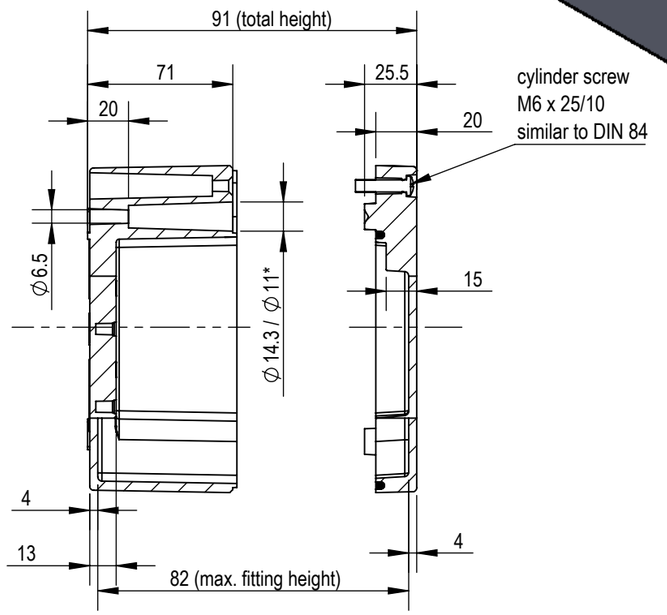

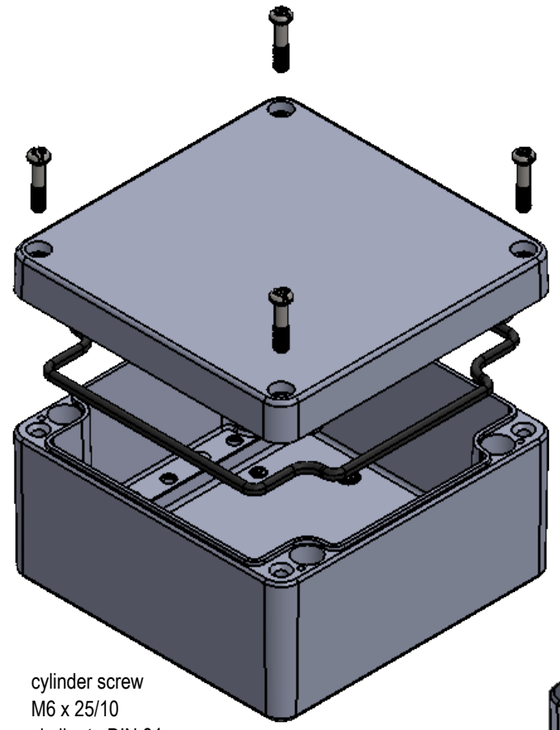

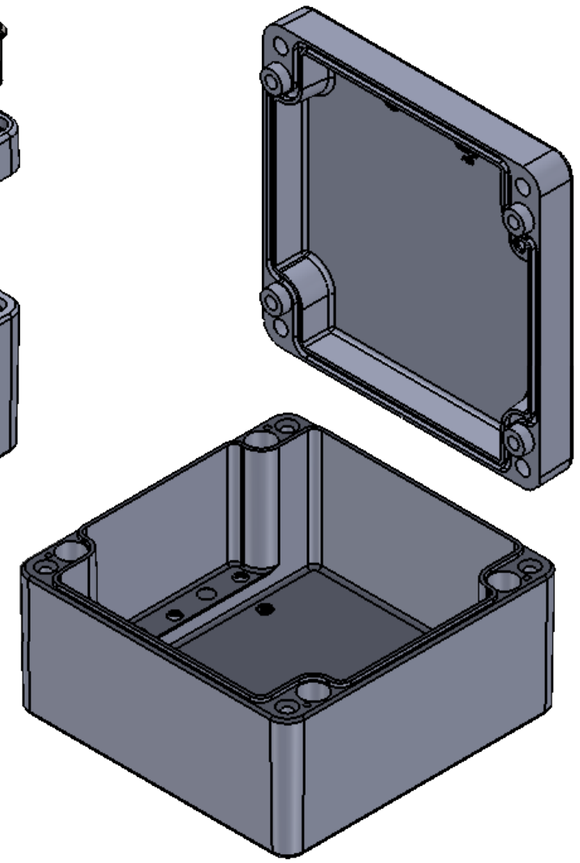

* = Conical form tapering downwords
Free dimensions-tolerance to GTA 13/5DIN 1688

ENCLOSURE/BOX MEETS THE REQUIREMENTS OF
IS/IEC 60529:2001
OR
EN 60529
FOR IP 66 AND IP 68 SEVERITY

BASE

				MANUFACTURER	MODEL	BRAND NAME
				DEMO CASTERS	BB 12	BBOX
TOLERANCE (AS PER) GTA 13/5 DIN 1688	MATERIAL ALUMINIUM ALLOY GdAlSi12(Fe) / DIN1706 / ENAC44300			ALL DIMENSIONS ARE IN : Millimeters (mm)	ENCLOSURE /BOX SIZE L X W X H 160 x 160 x 91	
ALL UNSPECIFIED RADII = R 1.5		DATE		SHEET SIZE : A3		
SALT MIST TEST > 1000 Hrs	DRAWN BY	09-08-2019	G.A.G		DRAWING NO	REVISION NO
FINISH NATURAL OR POWDER COATED	CHECKED BY	04-04-2021	RAJ.K.JHA	SCALE 1:3		
PROPREITY & CONFEDENCIAL : All information in this drawing is the sole property of DEMO CASTERS PVT LTD. Any reproduction inpart or as a whole without the written concent of Demo Casters is prohibitted.	APROVED BY	05-04-2021	V. BIJLANI		DEM-001-12	
	RELEASED					